D66–2138	ISSUE C
FIRST W.O.	

IF IN DOUBT–ASK
DO NOT SCALE

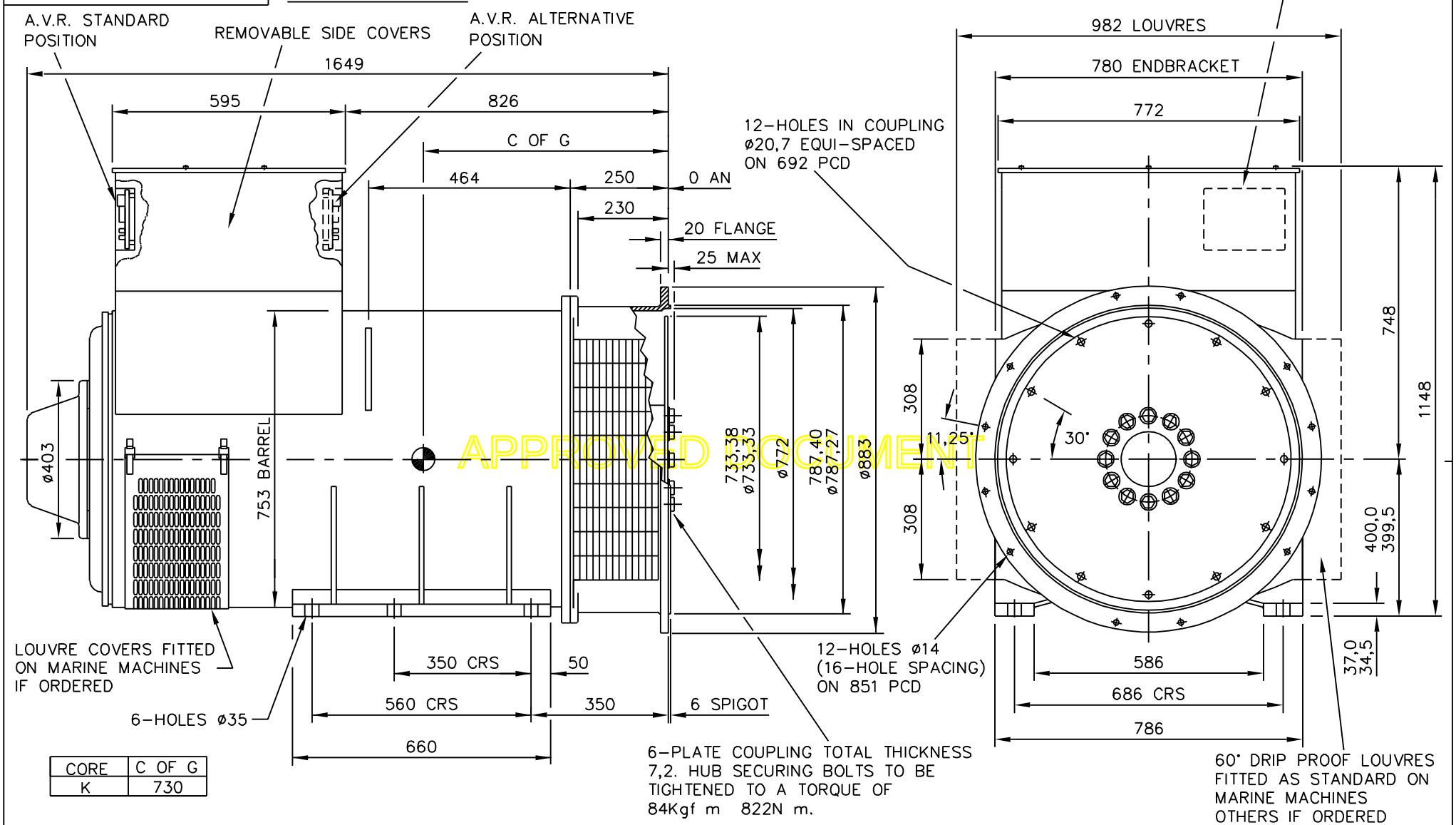

APPROVED DOCUMENT

CORE	C OF G
K	730

NOTE;–
CUSTOMER MAY CUT CABLE ENTRY HOLES AS REQUIRED IN ANY OF THE FOUR TERMINAL BOX SIDES SUBJECT TO POSITION OF AVR,TERMINALS ETC.

MOD'N	ISSUE	DRAWN	DATE	ALTERATION
4–8664–02	C	USD	15.09.06	CHANGE OF COMPANY NAME
4–7147–12	B	U.S.D	09.02.06	NDE LOUVRED PANEL REPLACED BY MESH COVER
4/2766/2	A	A.J.B.	09.01.01	ORIGINAL ISSUE

CERTIFIED PRINT (ONLY IF SIGNED)		
BY		
DATE		
DRAWN	A.J.B.	09.01.01
CH'D		
APP'D		

HC/CG6–1K(4 POLE) ALTERNATOR
ADAPTOR – SAE00
COUPLING – SAE24
STANDARD T/BOX

CUMMINS GENERATOR TECHNOLOGIES LTD.
STAMFORD ENGLAND

SCALE 1:10

FIRST W.O.

UNIT OF MEASUREMENT MILLIMETRES (mm)

D66–2138

ISSUE C